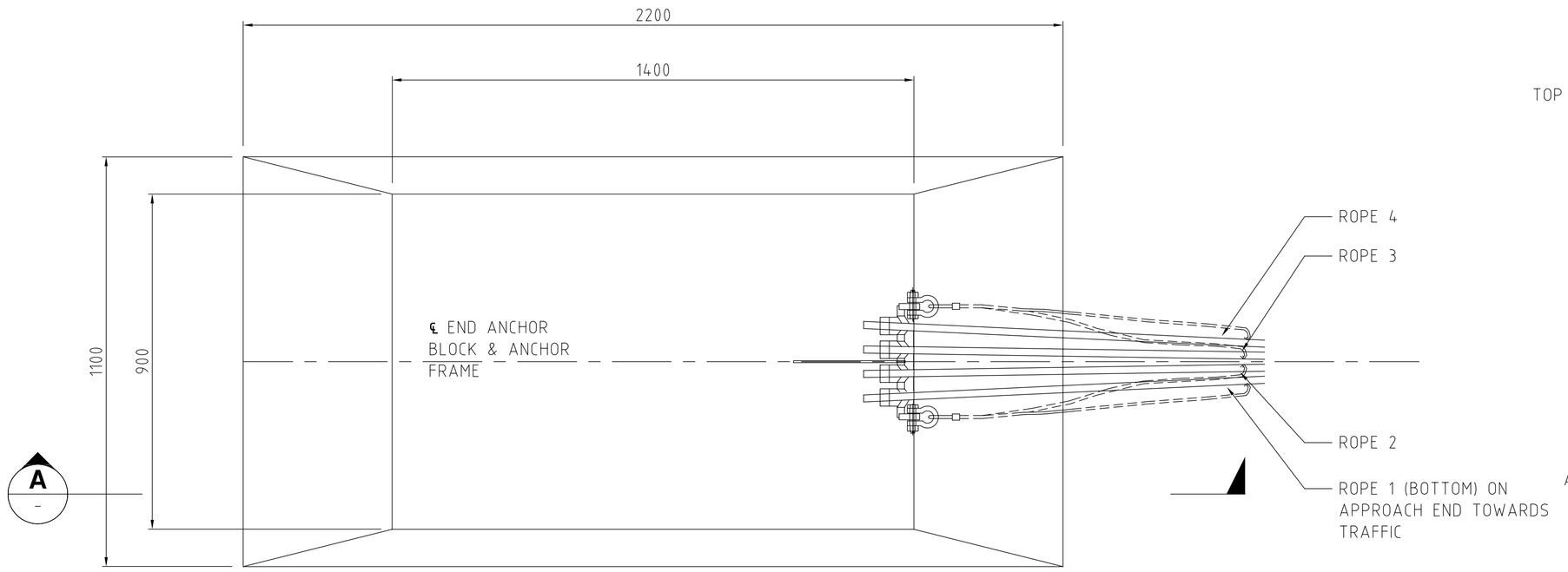

PLAN

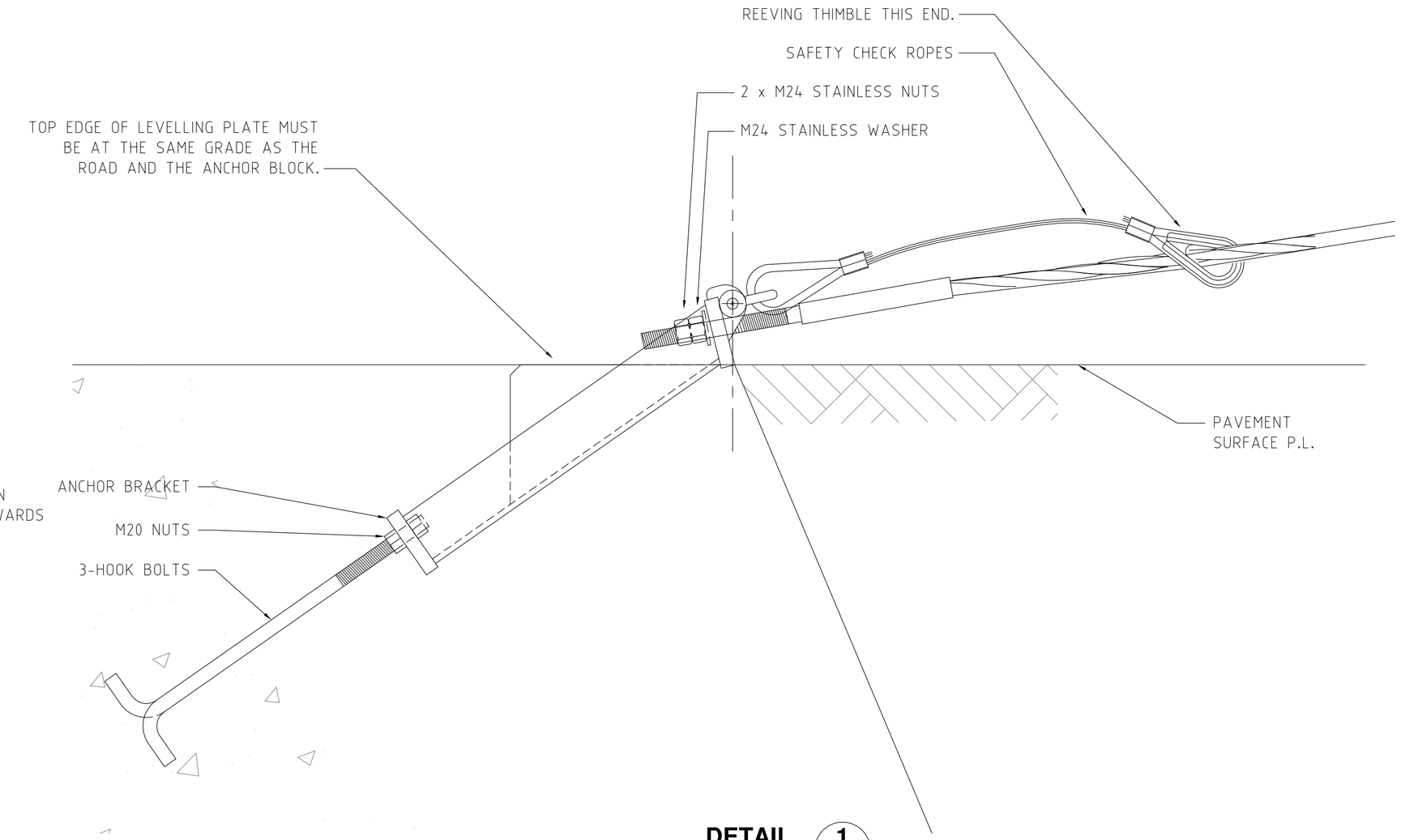

DETAIL 1 / -
NTS

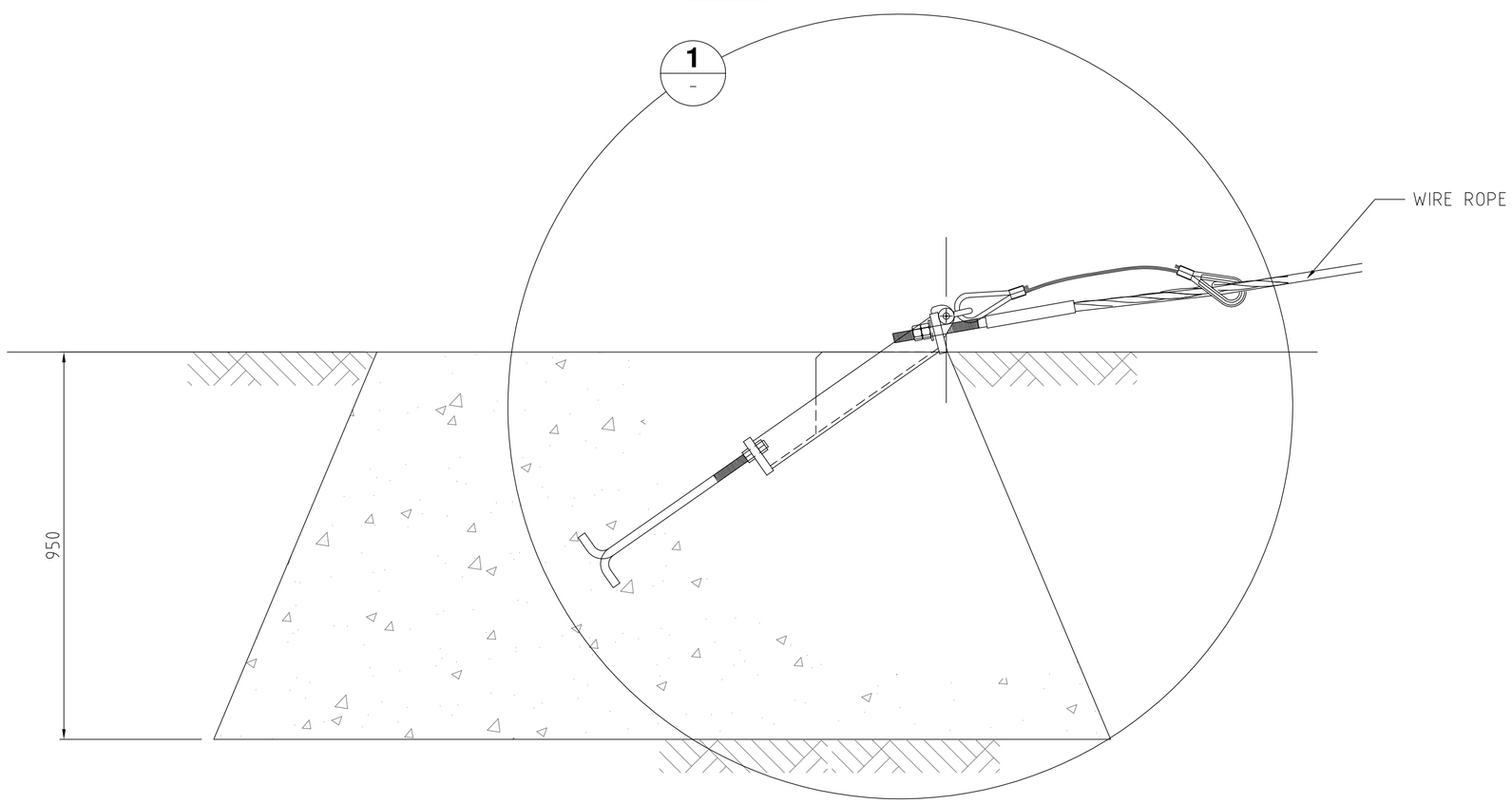

SECTION A / -
NTS

ENGINEERED BACKFILL MATERIAL:

1. THE DESIGN OF THIS STRUCTURE RELIES ON SOIL PROPERTIES PROVIDED BY THE FOLLOWING MATERIALS. COMPACTED TO 95% OF THE MAXIMUM DRY DENSITY FOR STANDARD COMPACTION IN ACCORDANCE WITH AS1289.5.1.1
2. APPROVED MATERIAL SHALL CONFORM TO THE FOLLOWING TABLE:

SOIL TYPE	UNIFIED SOIL CLASSIFICATION SYMBOL
WELL GRADED GRAVEL OR SANDY GRAVEL	GW
POORLY GRADED GRAVEL OR SANDY GRAVEL	GP
WELL GRADED SAND OR GRAVELLY SAND	SW
POORLY GRADED SAND OR GRAVELLY SAND	SP

3. INSITU SOIL SURROUNDING THE PRECAST ANCHOR BLOCK AND BACKFILL MATERIAL ADJACENT TO THE ANCHOR BLOCK SHALL COMPLY WITH THESE UNIFIED SOIL CLASSIFICATIONS. SELECT FILL AND INSITU MATERIAL SHALL HAVE A MAXIMUM LINEAR SHRINKAGE, DETERMINED IN ACCORDANCE WITH AS 1289.3.4.1, OF 8 PERCENT.

RECOMMENDED PARTICLE SIZE GRADING FOR BACKFILL MATERIAL:

SELECT FILL GRADING REQUIREMENTS	
SIEVE APERTURE mm	MASS OF SAMPLE PASSING* %
75.0	100
9.5	50-100
2.36	30-100
0.60	15-50
0.075	0-25

* DETERMINED IN ACCORDANCE WITH AS 1289.3.6.1

CONCRETE:

1. COMPRESSIVE STRENGTH OF CONCRETE AT 28 DAYS SHALL BE 32MPa.

NOTES:

1. ALL MEASUREMENTS ARE IN mm UNLESS STATED OTHERWISE.

REVISIONS

REV	DATE	DESCRIPTION	DRAWN	CHECKED	APPROVED
2	02/11/11	TITLE BLOCK UPDATED	DJB	TC	TC
1	12/02/10	INITIAL ISSUE	MS	TC	TC

REFERENCES

DRAWING NUMBER	REFERENCE DRAWINGS

	NAME	DATE
DRAWN	AUSTEC	2/11/2011
CHECKED	TC	2/11/2011
APPROVED	TC	2/11/2011
SCALE	NTS	
SIZE	A1	

INGAL CIVIL PRODUCTS
57-65 AIRDS ROAD
MINTO, N.S.W
AUSTRALIA 2566
PH. +61 2 9827 3333
FAX +61 2 9827 3300
www.ingalcivil.com.au

DRAWING AND CONTENTS ARE COPYRIGHT TO INGAL CIVIL PRODUCTS AND CAN ONLY BE USED WITH PRIOR WRITTEN CONSENT FROM INGAL CIVIL PRODUCTS

PROJECT
FLEXFENCE WIRE ROPE SAFETY BARRIER

TITLE
TRAPEZOIDAL (TYPE 2) ANCHOR BLOCK

INGAL CIVIL PRODUCTS REFERENCE No.

DRAWING No.
WR-STD-63

REV. 2