Decorative Lamp Post

POLE **SR4**

SMOOTH STRAIGHT 4 INCH DIAMETER POLE SHAFT

DECORATIVE BASE **D22S**

- Straight Non-Tapered, reinforced composite pole shaft
- Direct Embedded and Anchor Base models
- One piece XTREME® elastomeric urethane base cover

Ordering Information

Sample Catalog Number Logic

	B	C	D	E	F	G
SR4-D22S	12	DE	DGR	40	-30	
SR4-D22S	12	AB	BLK	27	-35	RC
BASE & POLE DESIGN	ABOVE GRADE HEIGHT	INSTALLATION METHOD	COLOR	TENON O.D.	TENON HEIGHT	OPTIONS

B Above grade height

Cat No.	Description
6	6 feet/1.83M
7	7 feet/2.13M
8	8 feet/2.44M
9	9 feet/2.74M
10	10 feet/3.05M
11	11 feet/3.35M
12	12 feet/3.66M

C Installation method

Cat No.	Description
DE	Direct Embedded
AB	Anchor Base

D Color

Cat No.	Description
BLK	Black
MTB	Matte Black
DBZ	Dark Bronze
DGR	Dark Green
HTG	Hunter Green
SLV	Silver
WHT	White
GRY	Grey
CC	Custom color - Please provide a min. 3” x 3” color chip.
RAL	Please provide a four digit RAL color number.

E Tenon O.D. (outside diameter)

Cat No.	Description
23	2 3/8” (60 mm)
27	2 7/8” (73mm)
30	3” (76 mm) nominal
35	3 1/2” (89 mm)
40	4” (102 mm)

F Tenon height

Cat No.	Description
-30	3.0” (76 mm)
-35	3.5” (89mm)
-40	4.0” (102 mm)
-50	5.0” (127 mm)

- *For other tenon sizes contact the factory.*

G Options

Cat No.	Description
RC	Receptacle housing and a NEC approved cover. GFCI receptacle by others. Standard location is 12”/305mm below the top of the pole.

- *Other accessories are shown on the Accessories specification sheet.*

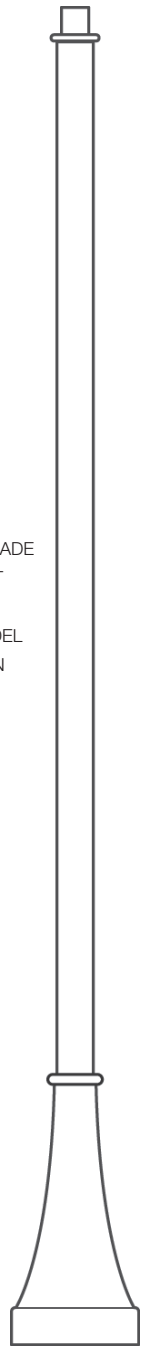

ABOVE GRADE HEIGHT

12’ MODEL SHOWN

HEIGHT: 30”/760MM

BASE DIAMETER: 14”/356MM

Whatley - Valmont Composite Structures, Inc.
19845 U.S. Highway 76 • Newberry, SC 29108 USA
Tel: 877.959.7678 | 303.287.8053 • Fax: 303.286.7216 • **whatley.com**

Direct Embedded - DE

SHAFT LENGTH	EMBEDDED DEPTH
6 to 12 feet	3ft/.91M

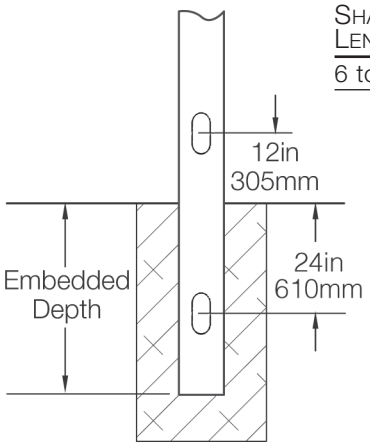

Anchor Base Installation - AB

BOLTS: 5/8" x 21" x 3" Galvanized with 8 washers and 4 nuts.

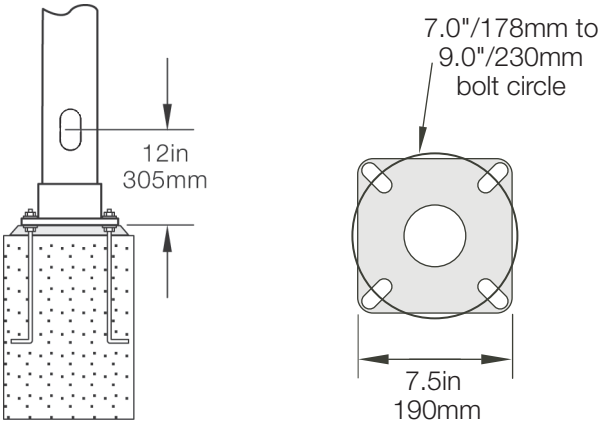

Wind Loading Data

			WIND SPEED (MPH) WITH 3 SECOND GUST FACTOR						
Cat No.	Description	WT	90	100	110	120	130	140	150
6	6 feet/1.83M	29	18.7	15.0	12.3	10.2	8.7	7.4	6.4
7	7 feet/2.13M	33	16.4	13.1	10.7	8.9	7.5	6.4	5.6
8	8 feet/2.44M	36	12.3	11.3	9.2	7.7	6.5	5.5	4.8
9	9 feet/2.74M	39	12.4	9.8	8.0	6.6	5.6	4.7	4.1
10	10 feet/3.05M	42	10.9	8.6	7.0	5.8	4.8	4.1	3.5
11	11 feet/3.35M	46	9.7	7.5	6.1	5.0	4.2	3.5	3.0
12	12 feet/3.66M	49	8.5	6.6	5.3	4.4	3.6	3.0	2.6

Wind speed values are for a 3-second gust per ASCE.
Calculated per ANSI C136.20-2012. 1.0 Importance factor.
Assumes load 12 inches above the pole top.
Safety factor = 1.5:1.

Contact the factory for AASHTO or specific local codes.

Specifications

POLE SHAFT

The composite lamp post shall be smooth straight. The post shall be 4 inches (102mm) in diameter with a nominal wall thickness of .28 inches (7mm). The hand hole shall be 2 inches (51mm) x 4 inches (102mm) with a cover. The post shall be constructed of fiberglass reinforced isopthalic epoxy resin utilizing glass roving, continuous strand mat and off axis fibers oriented for optimum strength and rigidity. The post shall be non-conductive and chemically inert.

PERFORMANCE CRITERIA

The post shall be designed with a minimum safety factor of 1.5:1 and have no more than a 10% deflection at full wind loading. The post shall deflect no more than 2.5% of the above-ground length with 100 lbs. of lateral top load (stiffness). Poles shall be tested and rated per ANSI C136.20-2012.

DIRECT EMBEDDED INSTALLATION

Direct embedded poles shall have a 2 inch (51mm) x 4 inch (102mm) hole for conduit entrance 24 inches (610mm) below finished grade. Embedded depths may vary per local codes, site soil conditions, drainage and very high wind conditions.

ANCHOR BASE INSTALLATION

Anchor bases shall be constructed of steel or 6061-T6 aluminum base plate. The base shall be factory bonded to the post. The anchor base shall have four holes at ninety degrees, accommodating a bolt circle of 7 inches (178mm) to 9 inches (230mm).

POST TOP

A painted 6061-T6 aluminum tenon shall be firmly bonded to the pole for mounting a post-top luminaire or arm.

FINISH

The surface of the post shall be uniform and consistent for the entire length of the post. A UV-resistant catalyzed urethane coating shall be extremely durable and retains its gloss after a 5000 hour exposure test (ASTM) to the sun, with no dulling or chalking of the surface.

ORNAMENTAL BASE COVER

The ornamental decorative base cover shall be one piece and constructed from a proprietary elastomeric urethane and finished to match the post. The base shall be corrosion free and extremely resistant to impact and chipping.

WARRANTY

The products shall be warranted to be free of defects for three years from the date of shipment from the factory.

Whatley - Valmont Composite Structures, Inc.
19845 U.S. Highway 76 • Newberry, SC 29108 USA
Tel: 877.959.7678 | 303.287.8053 • Fax: 303.286.7216 • **whatley.com**

SPC7392 10/15