valmont® COATINGS

HOT-DIP GALVANIZING

TECHNICAL HANDBOOK

The Process

I Introduction

The size of products that can be hot-dip galvanized is determined by the size of the zinc kettles, the tanks in the cleaning line, the crane capacities, or the building structure clearances within a particular galvanizing plant.

The most economical and highest quality galvanizing is achieved when steel products are sized to enable the entire product to be totally immersed in the molten zinc in a single dip.

When needs dictate that the product to be galvanized must be longer or deeper than the galvanizer's kettle, it can often be galvanized by means of the progressive dipping procedure. With this method, 50% or more of the surface of the product is immersed in the molten zinc. When the galvanizing of that portion is completed, the product is turned over and the remaining uncoated portion is lowered into the zinc and galvanized.

We urge fabricators, engineers and architects to consult with the Valmont Coatings location most convenient to them, on what local and regional sizing considerations should be. Regardless of the requirements, Valmont will utilize its robust multi-plant capability to best fulfill customer needs.

I The Process

At the beginning of the process, products are batched into bundles, trays or racks to be handled in the most effective manner through the cleaning line. At this stage, each product is examined to determine the presence of adequate details for venting and draining of fluids during cleaning and galvanizing, and to assure that, when necessary, the product is provided with holes or lugs for lifting. If additional venting details or lifting holes/lugs are required, the customer is notified and arrangements are made to install them.

Figure 1: Process for ASTM A123

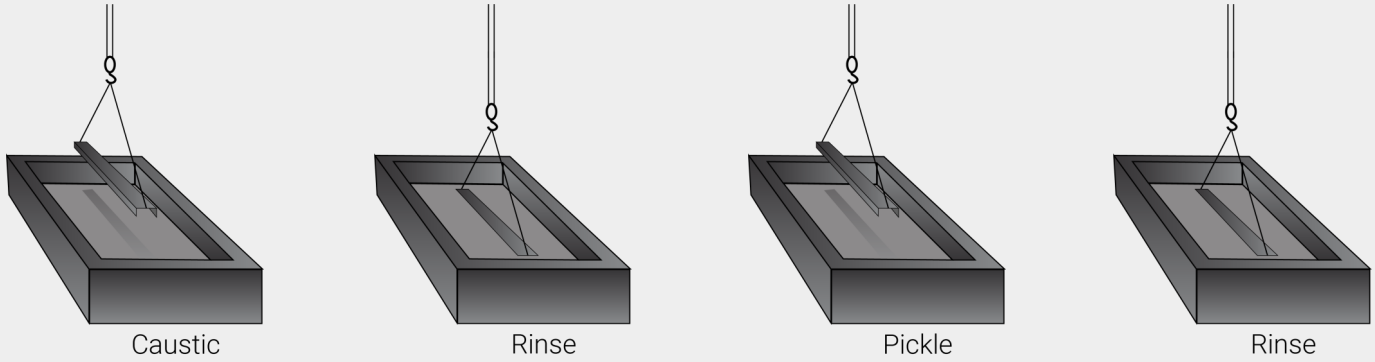

Figure 2: Process for ASTM A153

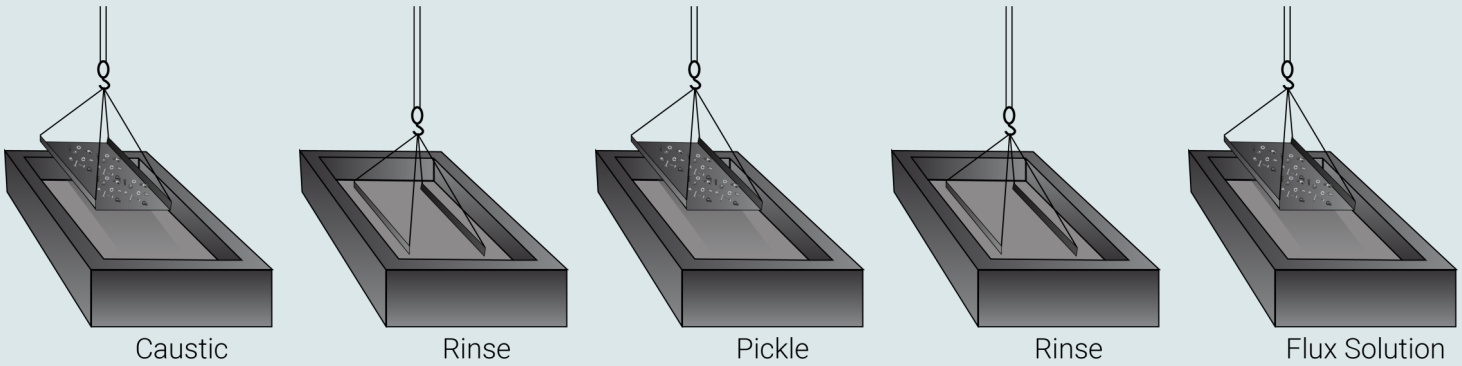

The Process

Caustic

The caustic tank contains heated water with caustic soda and detergent additives. Oils, soil and soluble paint markings are removed from products during immersion at this stage, and also works its way under light mill scale.

Rinse

A tank containing plain water is used to remove residues of the caustic dip.

Pickle

A bath of heated dilute sulfuric or ambient hydrochloric acid solution removes rust and mill scale from the products.

Rinse

Another tank containing plain water is used to remove residues from pickling.

Flux

Zinc ammonium chloride in solution provides additional cleaning of the products being dipped. During galvanizing, the film of flux on the products improves wetting between the steel and the molten zinc.

Re-Fixturing

Depending upon the product and/or type of batching used during cleaning, some products are re-fixtured, or re-batched, for better process through the molten zinc bath.

Galvanizing

The fluxed, possibly re-fixtured, product is taken to the zinc kettle. The products are lowered into the molten zinc. Products remain in the molten zinc until they reach the approximately +840°F molten zinc temperature.

Centrifuging or Brushing

(For ASTM A153 Only)

When the perforated basket containing the product is removed from the molten zinc, it is transferred immediately to the centrifuge where excess zinc is spun away.

Products that are too large to be centrifuged, but are still in need of removal of excess zinc, are subjected to brushing of the critical areas before the zinc solidifies.

Quench

After galvanizing and centrifuging or brushing (when applicable), the product may be immersed in a plain water quench to retain as much bright zinc surface as possible and to reduce the time required for handling (See figure 2).

Inspection

Products are visually checked for coating integrity and measured to verify that coating thickness meets or exceeds ASTM Standards.

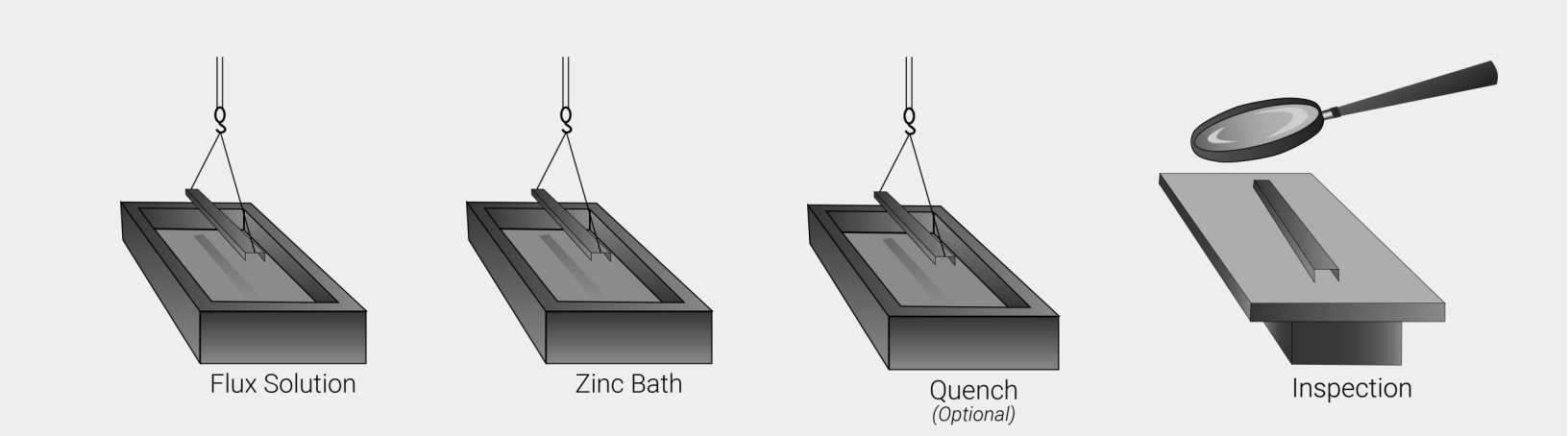

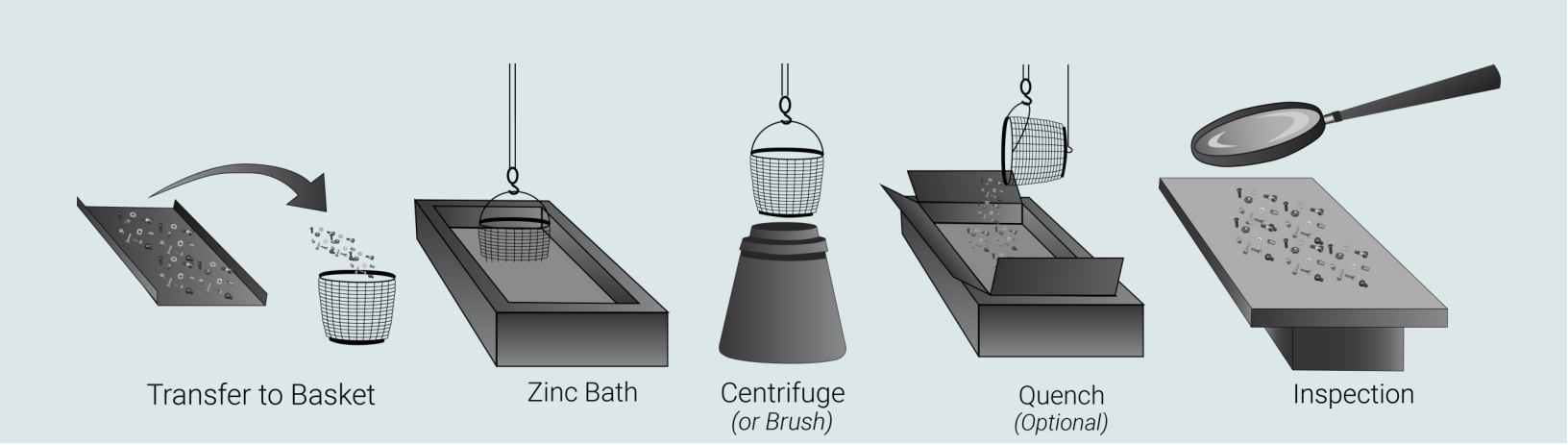

I Fabricators Guide to Pipe and Tube Galvanizing

Introduction and Purpose

The galvanizing of products that are made from tube or pipe requires special attention by the fabricator and the galvanizer. Installation of suitably sized holes in strategic locations on the product is essential to assure the correct galvanizing of all internal surfaces. The holes, so placed in the product, serve several purposes, namely to:

1. Prevent pressure build up and rupture of the product that could result from heating of enclosed air and moisture during partial or full immersion in the 840ºF galvanizing bath.
2. Provide for the rapid entry of cleaning fluids and molten zinc to overcome the natural buoyancy of hollow objects.
3. Enable air and galvanizers flux to escape from the last remaining upper corners of a product at the moment of total immersion. Elimination of air pockets allows cleaning fluids and molten zinc to reach all surfaces to permit complete internal cleaning and coating.
4. Eliminate the entrapment of pockets of zinc as the product is being withdrawn from the galvanizing bath. Properly size and placed holes avoid large and costly volumes of zinc from solidifying in deep recesses.
5. Imperative to the safety of galvanizing plant personnel.

In order to select adequate, yet economical details for vents and drains, it is necessary to understand how the product will be oriented as it is being lowered into the baths. This is a subject that the fabricator must consult with Valmont on, prior to processing.

Holes, placed in products to fulfill the functions listed, are referred to as “vents” and “drains”* in the galvanizing industry. Size and location of such holes are a frequent topic of conversation between a galvanizer and the fabricator. Conservative recommendations on the size and location of openings are given in ASTM A385, “Standard Practice for Providing High Quality Zinc Coatings (Hot-Dip).” In order to select adequate, yet economical details for vents and drains, it is necessary to understand how the product will be oriented as it is being lowered into the baths. This is a subject that the fabricator must consult with Valmont on, prior to processing.

The purpose of this section is to acquaint you with the principles Valmont uses in determining how to position a work piece for lowering into the baths, and how this leads to a determination of where the vents and drains should be located.

Some examples are given to show how the principles are applied to tubular products but, since the type and configuration of products are so varied, we are relying on these principles, coupled with the fabricators’ knowledge of their own product, to enable them to determine where vents and drains are required.

**Holes that are used to “drain” as a part is being removed from the bath have earlier served as “fill” holes during the immersion of the part. Use of the terms “fill” and “drain” should be taken to describe the same hole, depending upon how t is functioning at a particular stage of the process.*

Principles

1. Product is Oriented to Maximize Bath/ Kettle Space

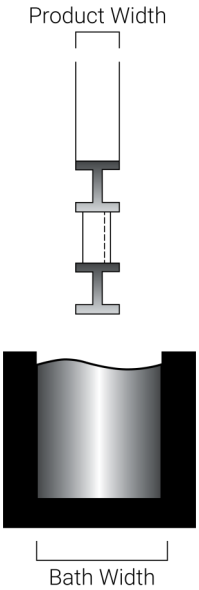

Generally, products are set up for galvanizing so that their smallest dimension parallels the bath width. Several identical pieces can often be galvanized side by side at the same time, thereby utilizing most of the width of the cleaning bath or zinc kettle.

It is with this orientation that the consideration of vent and drain openings begins.

2. Initial Fill Location is at Largest Available End Opening

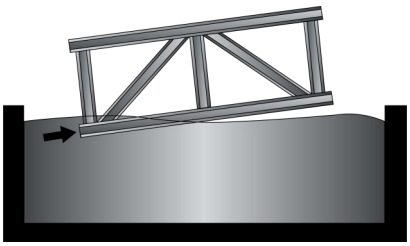

An opening at, or very near to, a lower end location of the product is selected as the initial entry opening to allow cleaning fluids and molten zinc to flow into the interior.

When a product has an opening at each of its two ends, and one of these openings is larger than the other, the larger opening will be chosen as the entry orifice, provided that it can be situated near the bottom of the product when suspended by a crane.

3. Final Vent is Positioned in the Spot Immersed Last

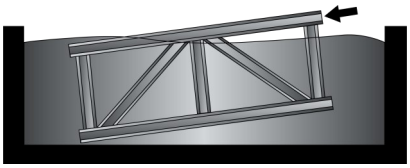

Good internal galvanizing depends on the ability of cleaning fluids and molten zinc to surge through the hollow product from the entry to the exit point, without compressing any air into packets in its path. In any hollow product, the last exit point must be located at the place where the last portion of the hollow component submerges into the bath.

4. Life Orientation is Suited to Initial Fill, Final Vent Locations

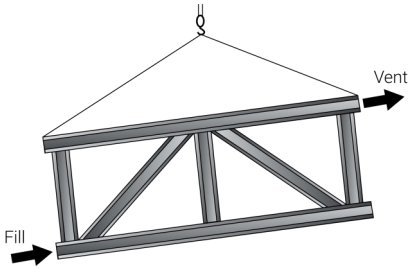

As the work piece is being lowered into each of the baths, the natural tendency of the cleaning fluid and molten zinc is to push upward through the product. To enhance this movement and to encourage a flow, especially along longitudinal components of the products, each work piece is arranged at a slight angle on the hoisting equipment as shown.

5. Size, Style and Location of Openings are Adequate

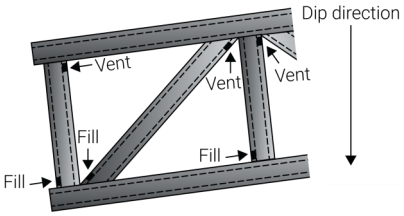

For secondary components, as for primary members, fill holes need to be located as close as possible to the point on the member where the fluids first make contact during immersion. Similarly, vent holes on secondary members need to be as close as possible to the point where the member is finally and completely immersed.

Other Valmont Coatings recommendations relation to openings are on the following page.

Minimum Size of Openings

Requirements for fill and vent opening size vary according to the size of tube or pipe being filled, and whether that tube or pipe is a primary or secondary component of the overall product. Fill and vent openings for primary members apply when these members have end closures of any kind.

The following tables provide guidelines on sizes that Valmont Coatings generally considers to be a minimum.

Pipe and Round Tube

Pipe & Tube Diameter	Minimum Fill & Vent Hole Diameter	
	Primary Member	Secondary Member
1-1/4”, 1-1/2”	5/8”	3/8”
2”	7/8”	1/2”
4”	1-5/8”	7/8”
6”	2-3/8”	1-1/4”
8”	3-1/4”	1-5/8”
10”	4”	2”
12”	4-5/8”	2-3/8”
14”	5-1’4”	2-5/8”
16”	6”	3”
18”	7”	3-1/2”
20”	8”	4”

Square or Rectangular Tube

Triangular corner cutouts, rather than round holes, are suggested for fill or vent openings in end closures on primary members made of square or rectangular tube. Round holes, however, remain suitable to be fill or vent openings in secondary members made from this type of tube. The following table lists square-inch units for minimum opening sizes in primary members, and hole diameters in inch units for minimum openings in secondary members.

Tube Cross Section (square inches)	Minimum Fill & Vent Hole Diameter	
	Primary Member (square inches)	Secondary Member (inches)
2.25	.6	1/2”
4.0	1.0	5/8”
9.0	1.25	3/4”
16.0	2.75	1”
25.0	4.5	1-1/4”
36.0	5.5	1-3/8”
49.0	8.0	1-5/8”
64.0	11.0	1-7/8”
81.0	13.0	2”
100.0	15.0	2-1/4”

Quality of Openings

The evenness of the edge of an opening plays a significant part in helping Valmont Coatings achieve a good looking galvanized coating around it. Regular openings allow a smooth spill of molten zinc upon withdrawal from the bath. Irregular, ragged edge openings cause molten zinc to splatter as it pours and should be avoided.

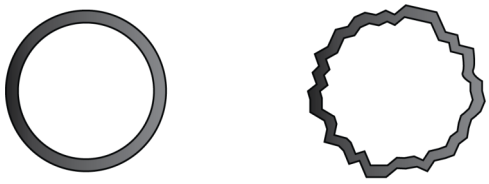

Good Avoid

Location of Openings

Openings are best located where they will help to fill, vent, and drain the tubes most rapidly. Their location on individual components must be related to the lifting direction of the overall assembly.

(a) In Primary Members

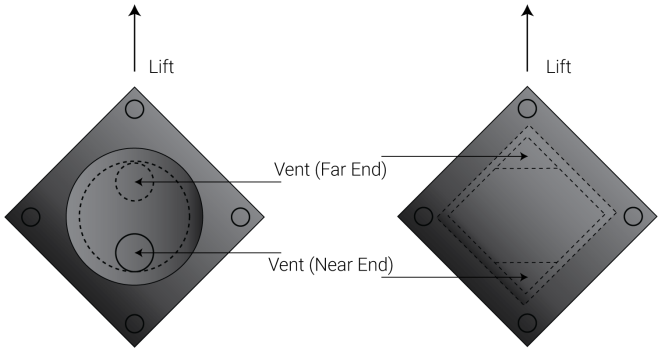

Round Single Square or Rectangle Single

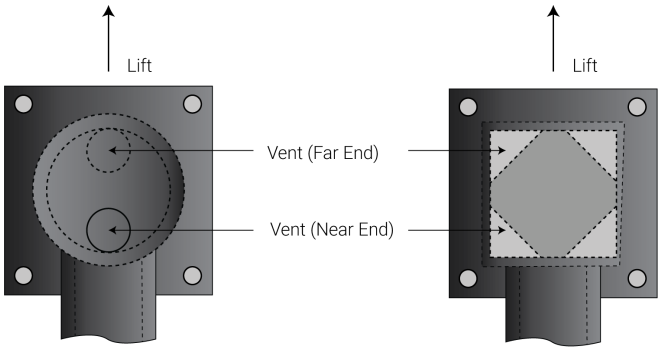

Round Assembly Square or Rectangle Assembly

(b) In Secondary Members

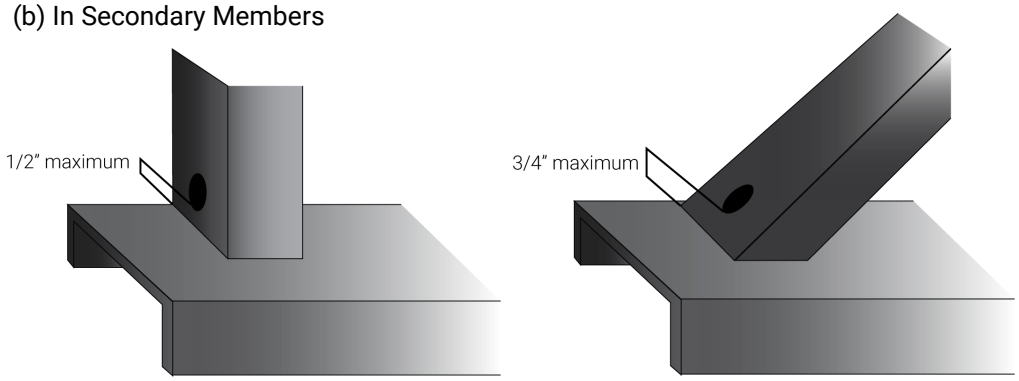

Perpendicular Member

Angled Member

6. Product Filled Slowly, Gradually from End to End

Slow immersion allows the bath and the product to adjust for their very different initial temperatures. Filling from end to end allows flux on the interior surfaces to be flushed out of the product.

7. Product is Drained Through Original Fill Holes

The sloped orientation of the work piece on the lifting equipment facilitates.

Customer Assistance

Valmont Coatings is happy to provide help to customers, upon request, to establish the size and location of vent and drain holes during the fabrication of an order.

If Valmont Coatings technicians determine additional vent and drain fabrication is necessary once a product is in the Valmont plant, we will notify the customer, provide costs for appropriate modifications and request

Examples

Tubular Bracket

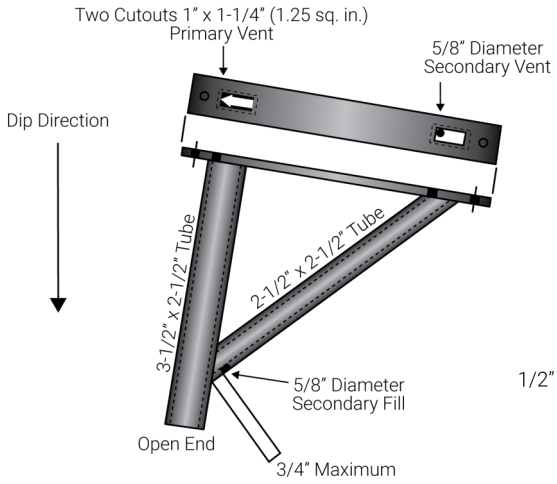

Pipe Handrail

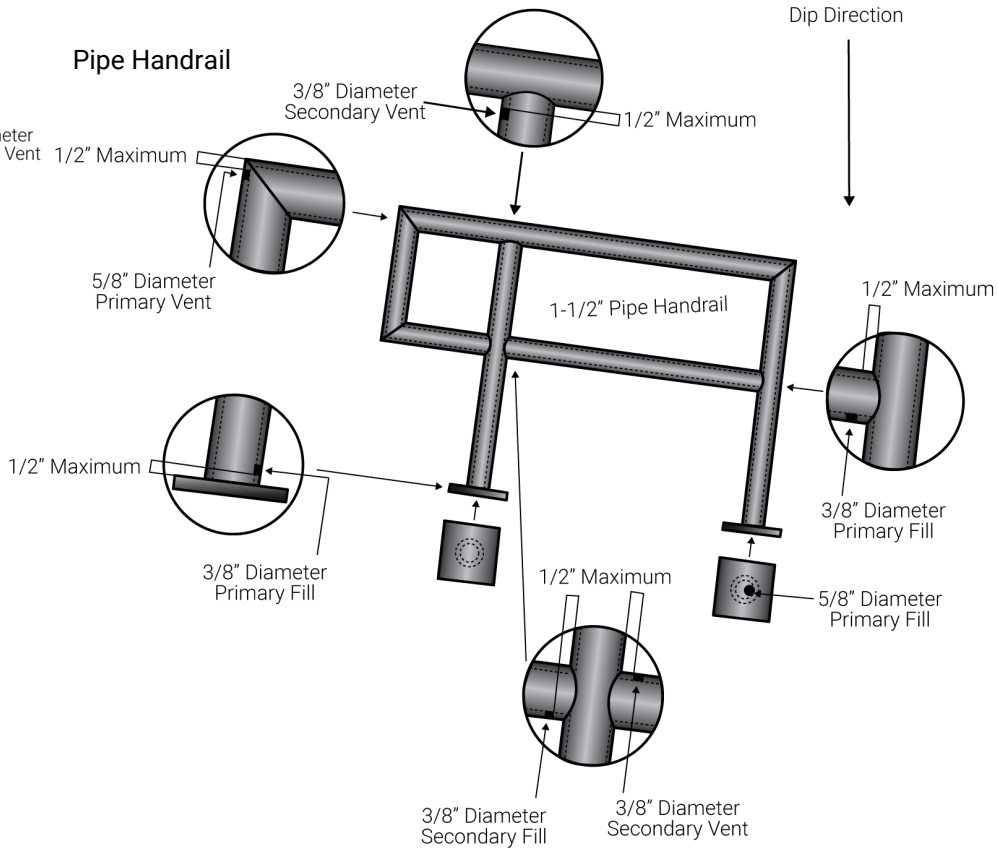

I Fabricators Guide to Open Section Galvanizing

Introduction and Purpose

Fabricated steel products that are to be galvanized should have details that would allow the galvanizer's cleaning solutions and molten zinc to flow freely through the product at various stages throughout the hot-dip galvanizing process.

When such details are made, they eliminate the formation of air pockets during dipping. This helps to assure that the steel is thoroughly cleaned and coated in all corners. Improperly cleaned areas of steel will not galvanize.

Details that allow a clear path for the run-off of molten zinc when steel parts are being withdrawn from the galvanizer's kettle result in a coating that is more evenly formed throughout the product. Proper details prevent unwanted zinc build-ups which, ultimately, add tot eh customer's cost, look unsightly, and may interfere with the fit-up of adjoining parts.

To determine how to avoid pockets and traps when a product is being hot-dip galvanized, the fabricator must first understand how a product will be oriented as it is being lowered into the lifted form the baths. This is not something that a fabricator could reasonably be expected to know without guidance from the galvanizer.

The purpose of this section is to acquaint you with the procedures that Valmont Coatings uses to: (1) determine how to position a work piece for lowering into, and lifting from, the baths, and (2) how this leads to a determination of where vents and drains should be located. The focus of this section is on the fabrication details for products made of open-sided components.

Examples are provided to show how the principles are applied to fabrications made of open-sided components. However, since the type and configuration of products are so varied, Valmont Coatings relies on these procedures, coupled with information provided by the fabricator's knowledge of their own product, to determine where vents and drains are required.

Principles

1. PRODUCT IS ORIENTED TO MAXIMIZE BATH/ KETTLE SPACE

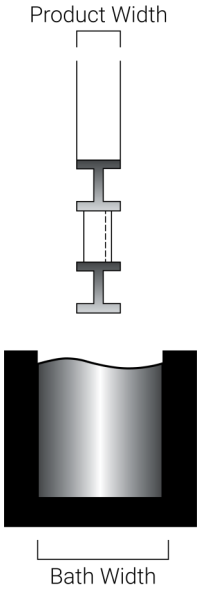

Generally, products are set up for galvanizing so that their smallest dimension parallels the bath width. Several identical pieces can often be galvanized side by side at the same time, thereby utilizing most of the width of the cleaning bath or zinc kettle.

2. PRODUCT SUPPORT LOCATIONS DEPEND ON SIZE, CONFIGURATION AND NUMBER OF PIECES PER LIFT.

Product is set up for galvanizing either by being placed into a rack, or by suspension from a harness of wires, hooks or chains that are attached through a suitably placed hole at the corner location near to the end of the product.

Rack

Use of a rack is preferable when: (1) there are many identical pieces to be galvanized, such as warehouse stock angle; or (2) these pieces are generally not more than 4" x 4" cross-section. Items galvanized in a rack do not need to be provided with a pick-up hole.

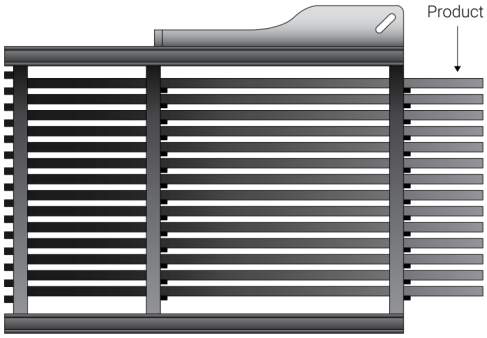

Side view of loaded rack

Fabricators Guide to Open Section Galvanizing

The majority of items that are hot-dip galvanized are suspended by wires, hooks or chains attached at one or more pick-up points on each work piece.

Single Point Pick-Up

Valmont Coatings will suspend from a single or corner pick-up point if: (1) the geometry of the product is reasonably streamlined along its length; (2) the product would give minimal drag through molten zinc as it was being moved along the length of the kettle; and (3) the length and major cross-section dimension of the product falls at or below the limits of the following graph.

Examples of products suited to single point pick-up

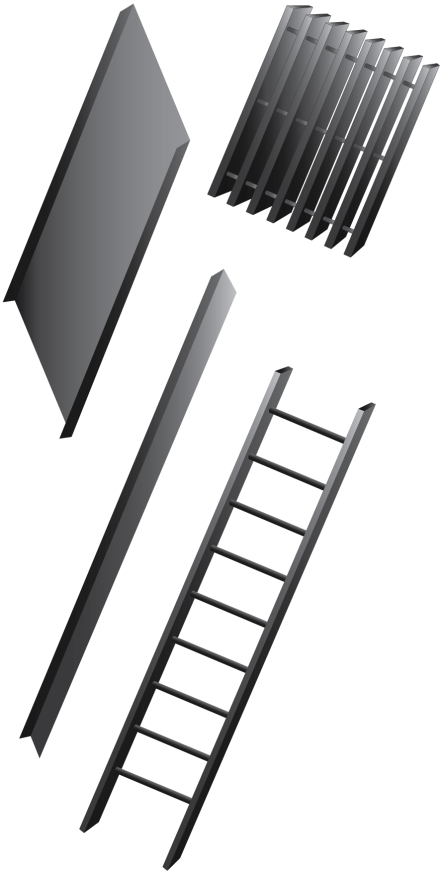

The graph is intended to provide only a very approximate guideline as to whether a product may be supported at a single pick-up point.

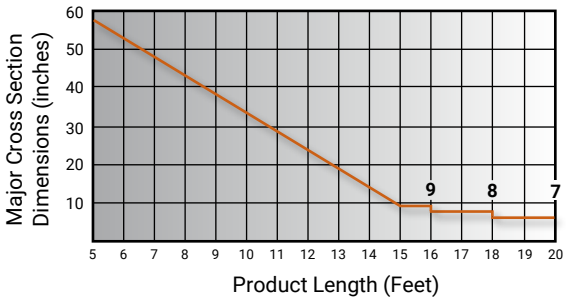

Example: A product with a major cross-section dimension of 20" and a minor cross-section dimension of 7" and a length of 11' will be lifted from a single pick-up point.

The required pick-up hole size is 3/8" diameter for items weighing less than 100 pounds, and 5/8th diameter for heavier items.

Two Point Pick-Up

Any product for which rack or single point pick-up is not practical is picked up from a wire harness, hooks or chain through a hole in each of its two ends.

The required pick-up hole size is 3/8" diameter for items weighting less than 200 pounds, and 5/8" diameter for heavier items.

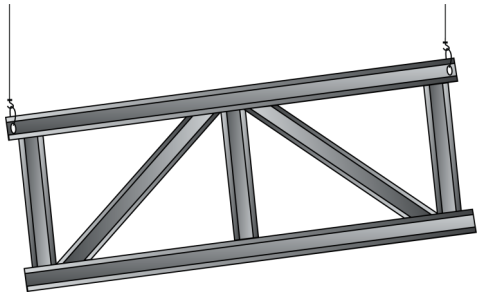

The product is arranged on the lifting equipment so that it enters the bath at an angle. The angular orientation is used to encourage a flow of molten zinc to move progressively along each component of the product form one end to the other. This provides a more uniform wetting action between the steel and the zinc, and better drainage upon withdrawal.

3. Choice is Top or Bottom Side Is Based on Openness

Determination is made as to which of two sides of a product will be first to be lowered into the bath. This is particularly significant when the ends (in the case of one point pick-up) or the sides (in the case of two point pick-up) or the sides (in the case of two point pick-up) are not the same.

Guidelines to help determine how a product will be hung, based upon its width, are provided in Principle No. 1. It must also be determined which remaining side will be the top, and which will be the bottom.

For each submersion of non-symmetrical products, Valmont Coatings will choose the side that is most open to be the bottom.

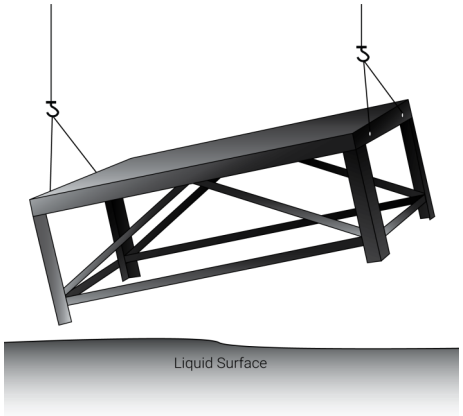

A table-like stand, for instance, would be lowered legs first.

4. Potential Air Pockets and Zinc Traps are Identified.

Once it has been determined how a product is likely to be picked up and oriented, it is possible to identify places where air pockets could potentially form during submersion, and also where molten zinc could be prevented from draining during withdrawal.

The illustrations provide examples of frequent problem areas and the proper methods to avoid them.

Venting at Structural Panel Point

Detail needed:
1/2" diameter hole made at each corner prevents air pocket formation.

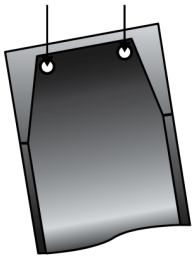

View A

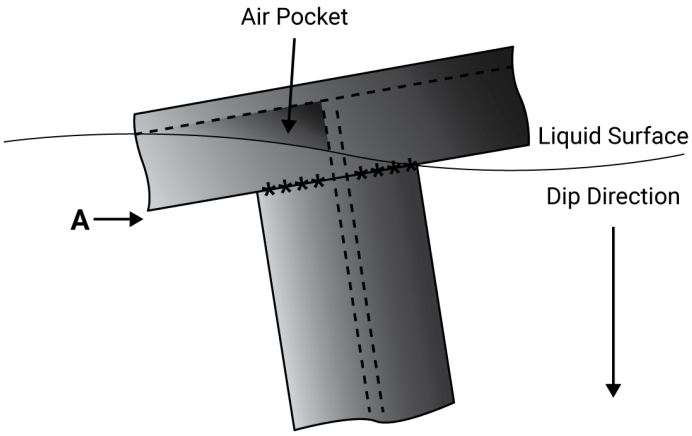

Draining at Structural Panel Point

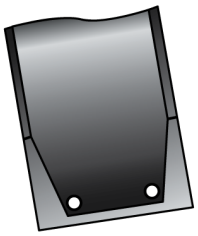

Detail needed:
1/2" diameter hole made at each corner prevents a trap for galvanizing liquids.

View B

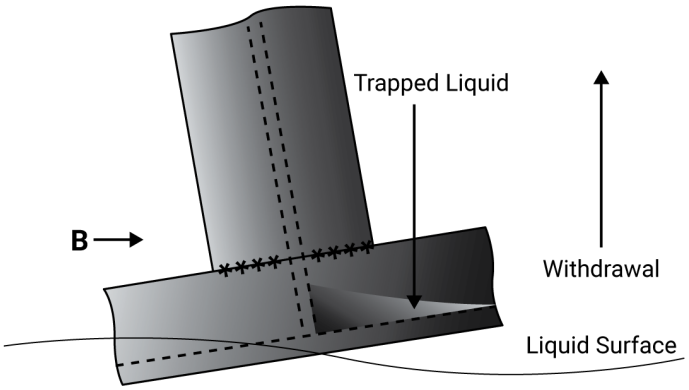

Venting at Base of Post

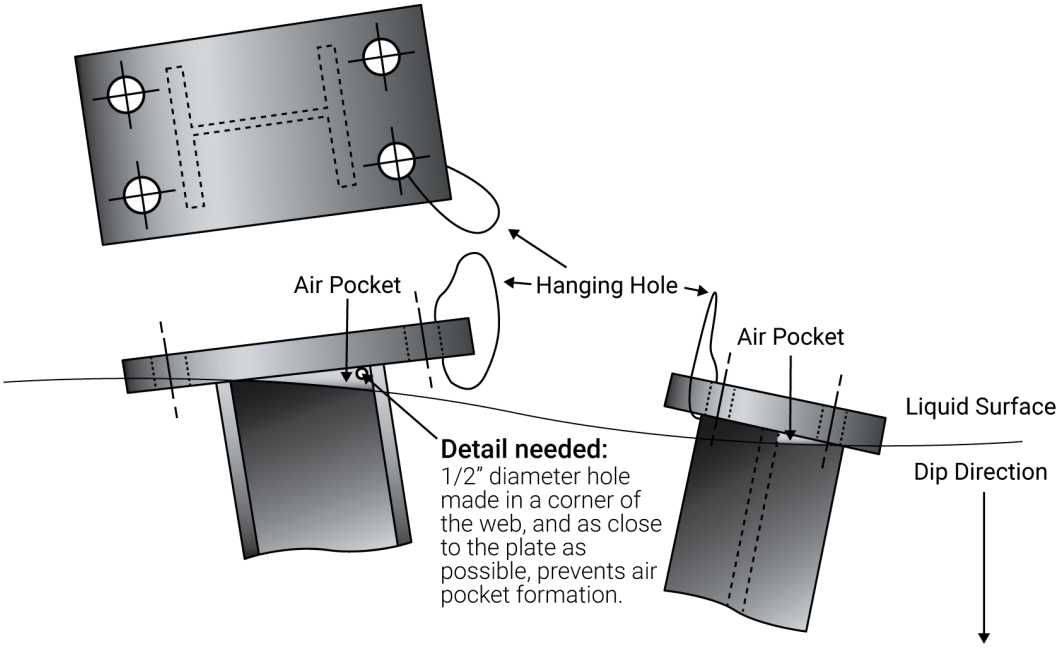

Venting and Draining of Enclosure Body

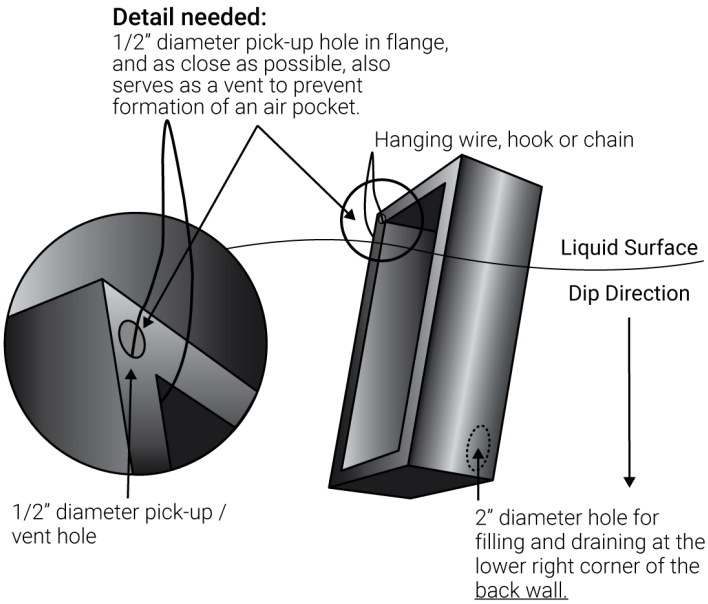

Customer Assistance

Valmont Coatings is happy to provide help to customers, upon request, to establish the size and location of vent and drain holes during the fabrication of an order.

If Valmont Coatings technicians determine additional vent and drain fabrication is necessary once a product is in the Valmont plant, we will notify the customer, provide costs for appropriate modifications and request permission to install or modify the holes.

Venting and Draining of a Stand

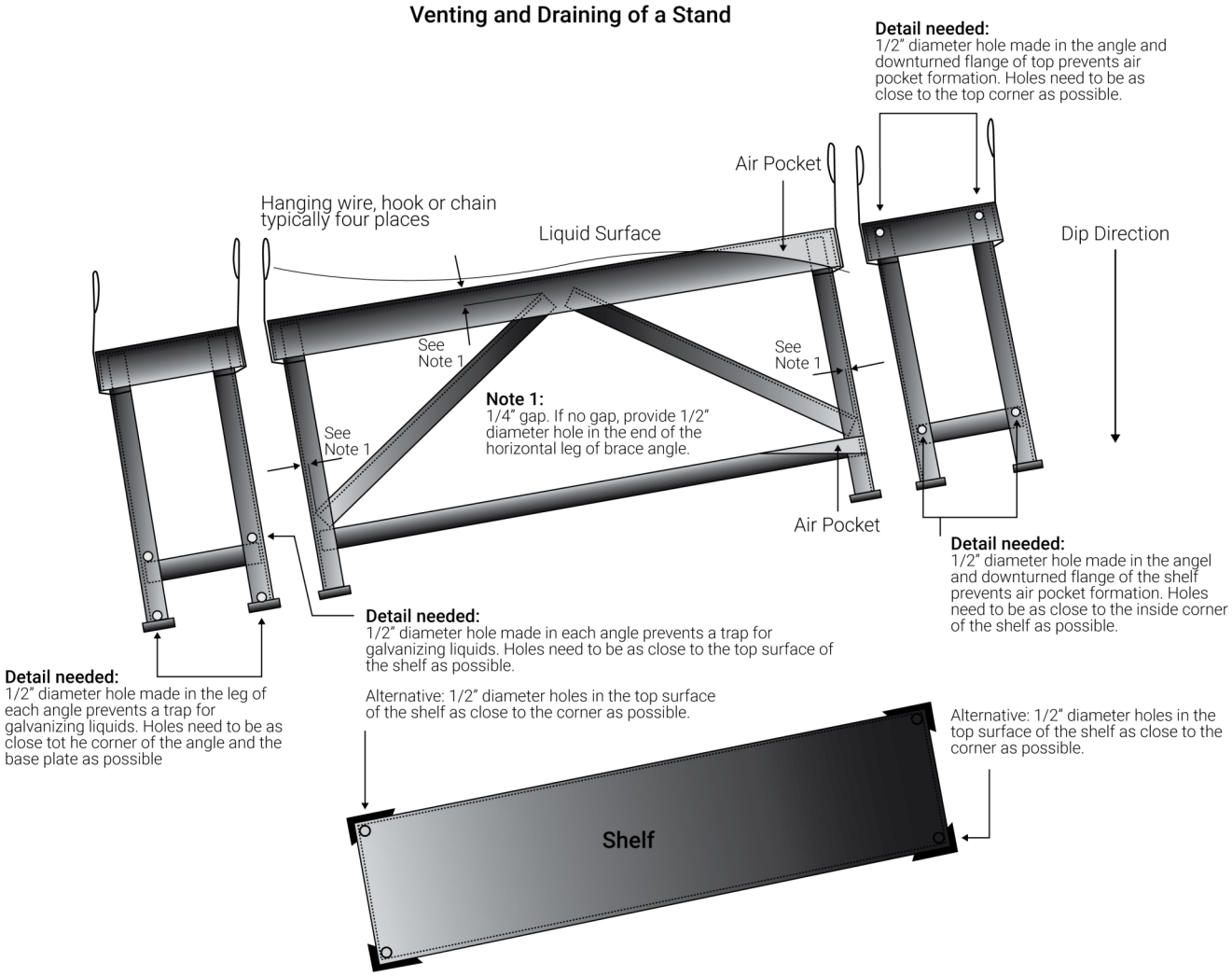

Construction: Angle legs and braces; sheet or plate top and shelf with brake formed flanges.

I Control of Distortion in Galvanized Products

Introduction and Purpose

This article describes major causes of distortion that become evident after hot-dip galvanizing and suggests ways to reduce the risk.

Considering the volume of products that are hot-dip galvanized, the occurrence of distortion is quite infrequent. When it does happen, however, distortion is a serious concern to the fabricator and galvanizer alike, involving extra costs and possibly delays to remedy the problem.

An understanding of the causes of warpage during galvanizing can lead to measures that will eliminate or substantially reduce the problem.

Overview

In many instances, the potential for distortion has been put into the product before its arrival at the galvanizing plant.

Distortion can be due to:

> Residual stresses induced at the mill during rolling of structural sections or plate.
> Residual stresses created by bending or welding.
> Lack of symmetry in simple sections such as channels or in built up sections.
> A combination of thick and thin material in the same assembly.
> Assemblies made so large that they require double dipping to be coated over their entire surface.

Considering the volume of products that are hot-dip galvanized, the occurrence of distortion is quite infrequent. When it does happen, however, distortion is a serious concern to the fabricator and galvanizer alike, involving extra costs and possibly delays to remedy the problem.

Causes and Prevention

Cause & Prevention: Welding

There are several actions the fabricator should take to minimize the potential for distortion due to the release of stresses in welds. Those actions are as follows:

> Avoid over welding
> Use as few weld passes as possible
> Place welds near the neutral axis
> Balance welds around the neutral axis
> Use backstep welding
> Make weld shrinkage forces work in the desired direction
> Balance shrinkage forces with opposing forces
> Use a well planned, balanced welding sequence
> Remove weld shrinkage forces during and after welding
> Reduce the welding time

More information on these points and additional guidance on minimizing distortion in weldments is given in the brochure, “Distortion...How to Minimize It With Sound Design Practices and Controlled Welding Procedures, Plus Proven Methods for Straightening Distorted Members,” written by Omer W. Blodgett, P.E., and Duane K. Miller, P.E., and published by Lincoln Electric Company.

Control of Distortion in Galvanized Products

Cause: Bending

While a product may have the correct form in the "as fabricated" condition, stresses induced in the product during bending operations at the fabricating plant may be released when the product is galvanized.

The galvanizing temperature is 840ºF, is at the low end of the stress relieving temperature range. Consequently, stresses induced by bending may be released during galvanizing with a resultant change in shape or dimension of the fabricated product.

Consider the case of a plate section that has a curve rolled into it so that when several such sections are joined, they form a circle. As a result of galvanizing, the plate would relax to a greater radius than the dimension originally fabricated.

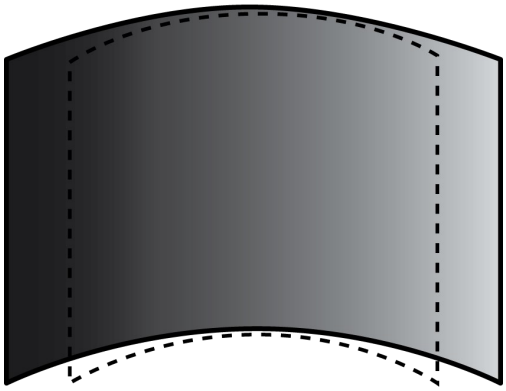

Prevention: Bending

Installation of temporary struts across the chord of the circle will enable the curved section to retain its form. The struts would be structural angles or channels bolted or welded into position. Their size will be proportional to the size and thickness of the plate section. The struts should be located at the quarter points of the height of the section as shown below.

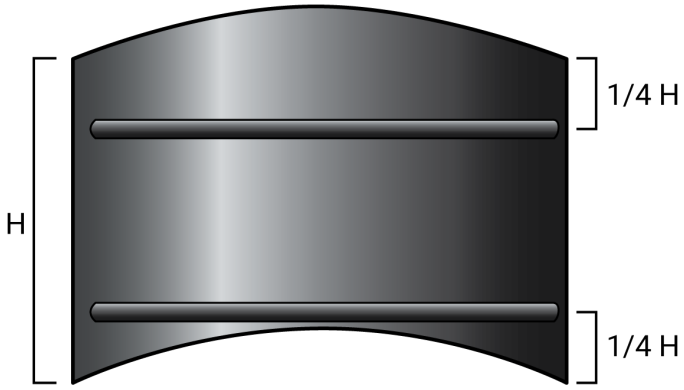

After galvanizing, it would be necessary for the fabricator to remove the struts and repair the area where they had been joined to the plate.

Valmont Coatings is pleased to assist customers in establishing strut and end connection details based on each particular case.

Control of Distortion in Galvanized Products

Cause: Lack of Symmetry in Product

The potential for warpage is greatly reduced when a product is symmetrical about its horizontal and vertical neutral axes. When a symmetrical section such as a simple I-beam is galvanized, thermal expansion forces above and below the neutral axis balance each other and leave the beam free of distortion.

However, in the case of unsymmetrical sections, such as a wide flange beam with a rectangular structural tube welded to its top flange, a geometric imbalance has been created. The wall of the tube is considerably thinner than the flange of the beam. Consequently, the tube material will be thoroughly heated to the temperature of the galvanizing bath, while the bottom flange of the beam lags behind it in coming up to bath temperature. As a result, the tube material is expanding fast, but the cooler bottom flange is unable to keep pace. If such a beam were to be galvanized in the configuration shown, it would experience upward bowing distortion.

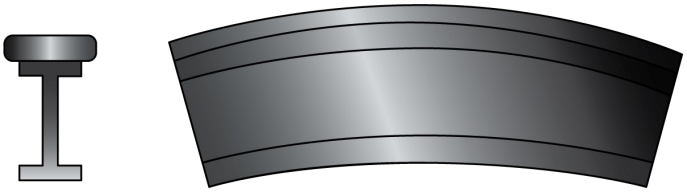

Prevention: Lack of Symmetry in Product

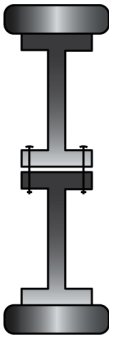

This problem can be prevented in any of three ways, depending upon economics and desire to maintain the integrity of the corrosion protection:

(a) Galvanized the sections back-to-back if there are a number of identical pieces on the order that allow this to be an option.

Beams would be bolted back-to-back using pipe spacers to separate the beams to allow the flanges to be cleaned and galvanized. The bolts would be removed after galvanizing when the sections have cooled. Spots where the spacers contacted the beam flanges would be repaired with galvanizing repair material. Valmont Coatings is pleased to assist in the determination of the number and size of bolts to use. Separation and touch up of the sections would be the customer's responsibility unless other arrangements are made.

(b) Fabricate and galvanize the I-beam and tube as separate loose pieces. Then, weld them together after galvanizing. Touch up welds with galvanizing repair material.

(c) Redesign the section to make it symmetrical.

Distortion in structural channels is typically a uniform bow in the weak direction with the toes of the channel pointing away from the radial center. This distortion can also be minimized by the back-to-back method.

Cause: Thick and Thin Material in Assembly

Thin material in an assembly expands faster than thicker materials nearby because it takes less time to be fully heated to the galvanizing temperature. Distortion will take place in thin material when thicker material restrains it from free expansion.

Consider the case of steel sheet or plate placed on structural frame and securely attached by welds around its perimeter. Imagine that the sheet or plate is only half as thick as the material in the frame. The sheet soon reaches the galvanizing temperature of about 840ºF and its maximum potential expansion. The frame, being thicker, is still cooler and has not yet had the opportunity to expand as much as the sheet. Since the sheet cannot push its growth outwards at the edges because of the welds, its increase in size results in one or more buckles in the sheet surface.

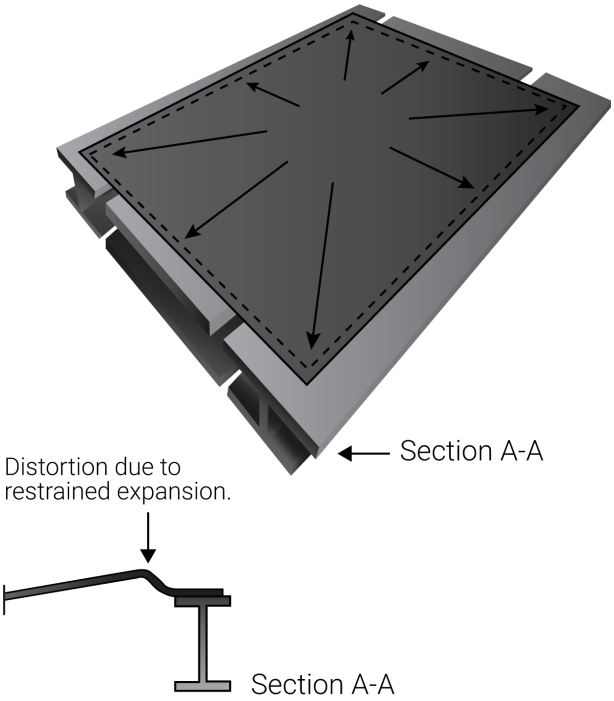

Prevention: Thick and Thin Material Assembly

Two approaches can be taken to avoid this condition:

(a) Galvanize the sheet and frame separately and join them after galvanizing.

(b) Use the same thickness of material for the frame and sheet.

Cause: Size of Assembly Requires Progressive Dip

The potential for warpage increase when an item is so large that the galvanizer must dip one portion at a time in order to fully coat it.

The portion immersed in the zinc is subjected to much higher temperature and greater thermal expansion than the portion projecting from the kettle, especially during the first dip. The differential heating and expansion between the two portions can cause distortion that will not be removed when the remainder of the product is placed into the molten zinc.

Simple pipes and poles do not experience distortion from double dipping, probably because of their symmetry and simplicity of design.

Whenever possible, it is preferable to size a product so that it can be totally immersed in a single dip.

Even though a product is small enough to be immersed in a single dip, it is important that fill and drain holes be large enough to enable the part to be immersed and withdrawn rapidly to avoid differential expansion.

Whenever possible, it is preferable to size a product so that it can be totally immersed in a single dip.

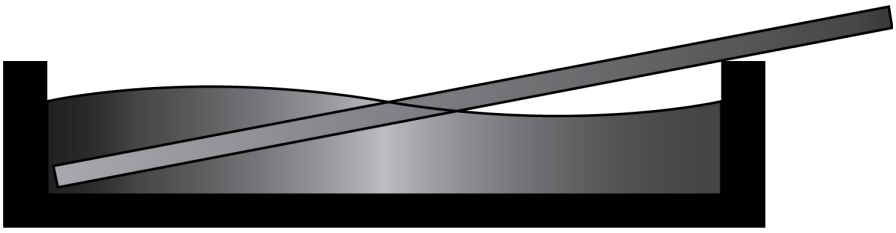

Customer Assistance

Upon request, Valmont Coatings will assist customers with countermeasures to minimize distortion issues during the fabrication of an order.